TECHNICAL DATA

Three Phase Electric Motors - Aluminum Frame
PE31 100L1-8
0.75 kW / 1 Cv
715 RPM

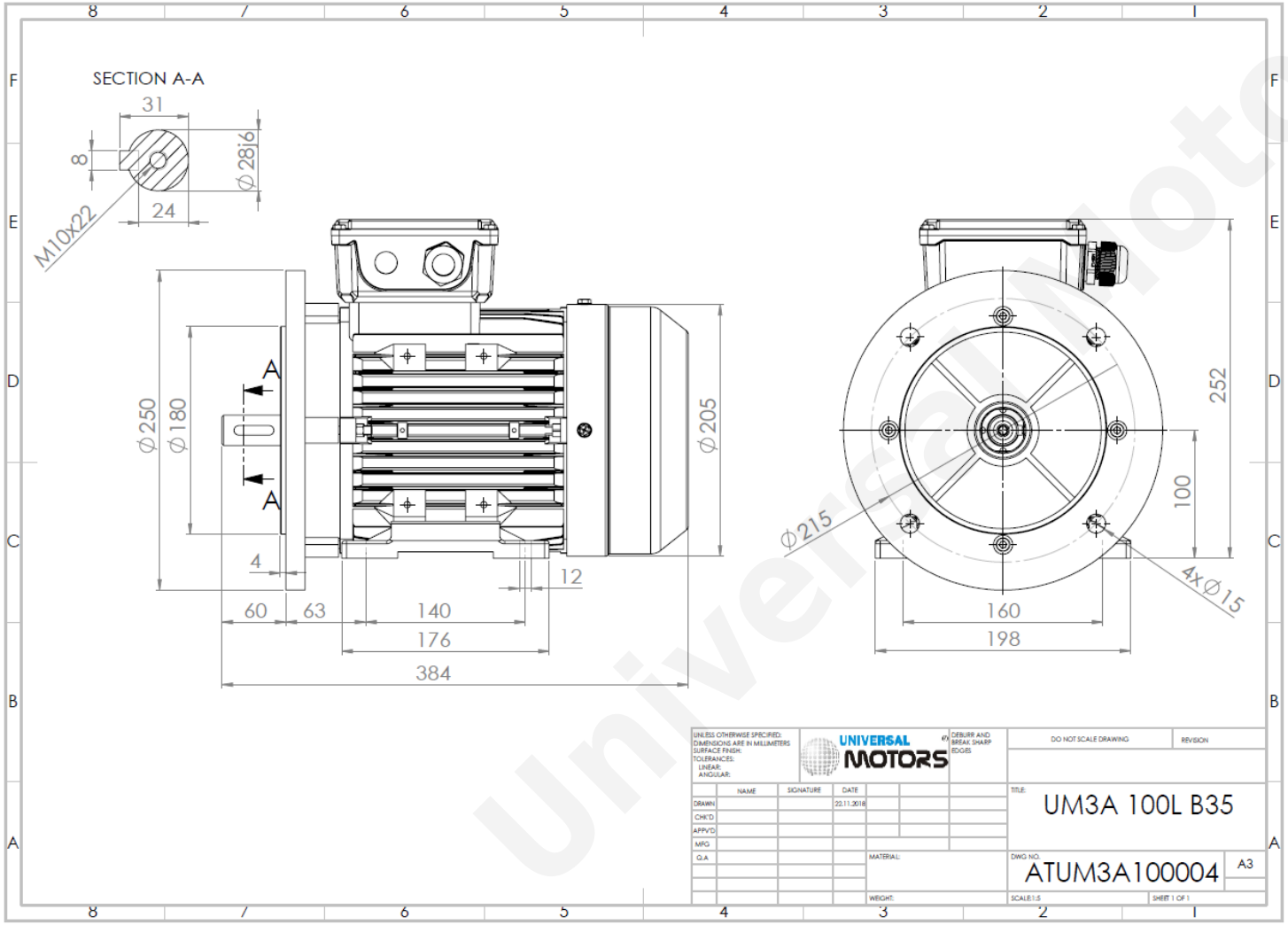

Motor type:	**PE31 100L1-8**
Output:	**0.75 kW / 1 Cv**
Speed (min^{-1}):	**715 RPM**
Frequency:	**50 Hz**
Voltage:	**400 V**
Current:	**2.2 A**
Power factor (Cos Ø):	**0.655**
Poles:	**8**
Insulation class:	**F**
Temperature rise Class:	**B**
Efficiency 50%:	**73.2 %**
Efficiency 75%:	**77.1 %**
Efficiency 100%:	**77.4 %**
Torque:	**10.0 N.m**
Tstarting/Tnominal:	**2.0**
Istarting/Inominal:	**4.41**
Tmaximum/Tnominal:	**2.5**
Noise:	**62 Db(A)**
Weight:	**21.0 Kg**
Bearing DE:	**6206 2Z C3**
Bearing NDE:	**6206 2Z C3**

Regime - S1 **Altitude - 1000m** **Environment Temperature - 40ºC**

* References applied only in the UK

CONTACTS:

UNIVERSAL MOTORS
Rua de São Brás,745
4480-782 VILA DO CONDE
Tel: +351 252 299 080
Fax: +351 252 299 089
Mail: geral@universalmotors.pt

Universal Motors